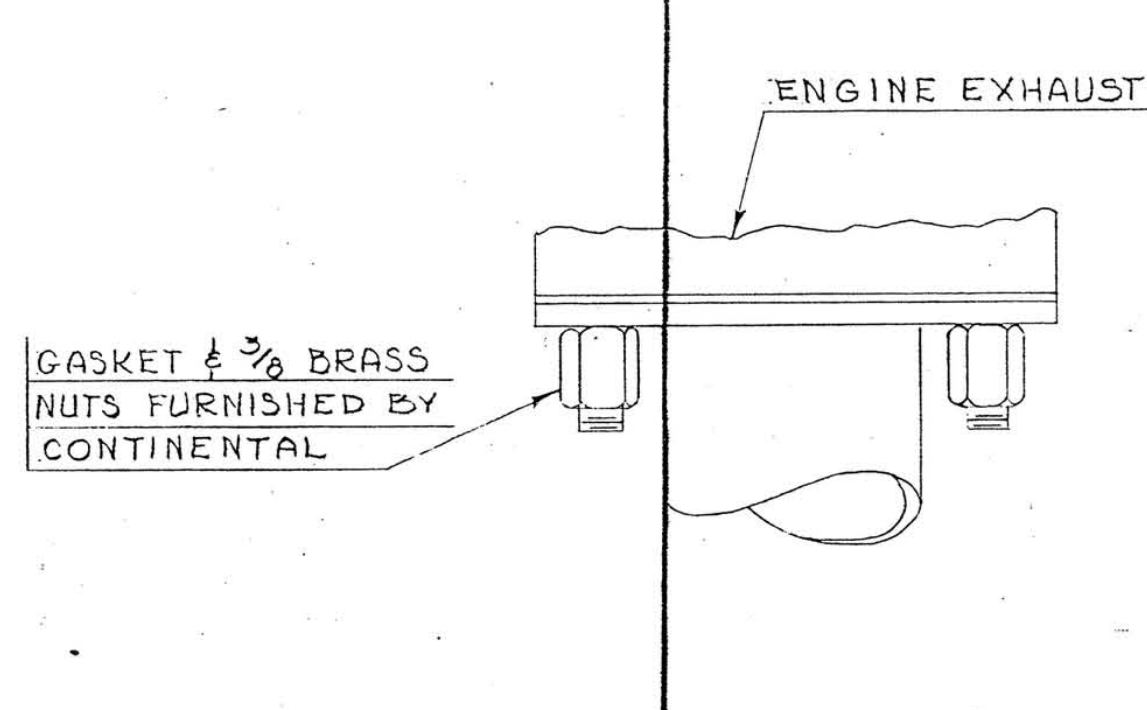
ENGINE EXHAUST OUTLET
GASKET & 3/8 BRASS NUTS FURNISHED BY CONTINENTAL

FIG. 1
EXHAUST STACK ATTACH.
FULL SIZE

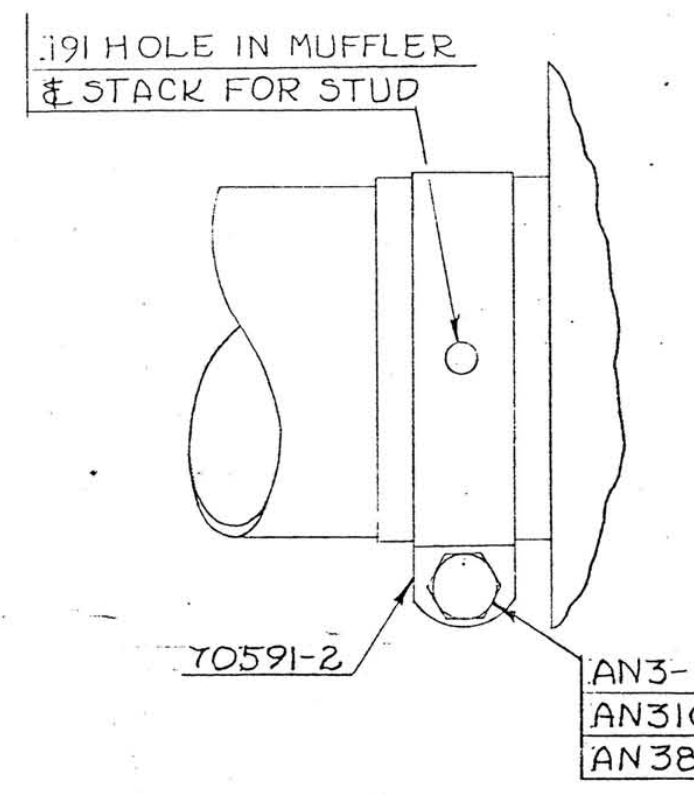
.191 HOLE IN MUFFLER & STACK FOR STUD
70591-2
AN3-5
AN310-3
AN380-2-2

FIG. 2
STACK TO MUFFLER ATTACH.
FULL SIZE

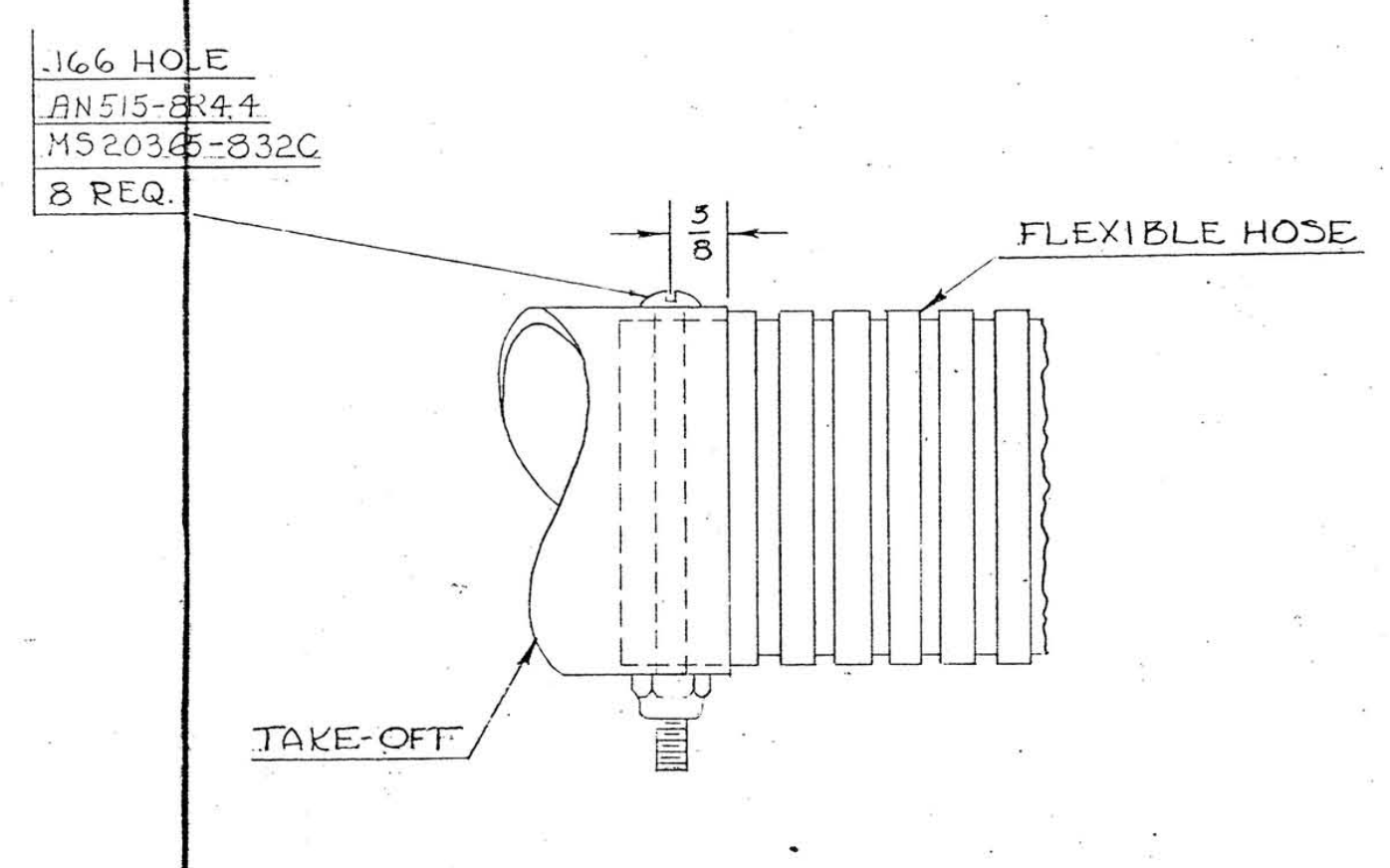
.166 HOLE
AN515-8R44
MS20365-832C
8 REQ.
FLEXIBLE HOSE
TAKE-OFF

FIG. 3
ATTACH. OF 2 1/2 D. FLEXIBLE HOSE
FULL SIZE

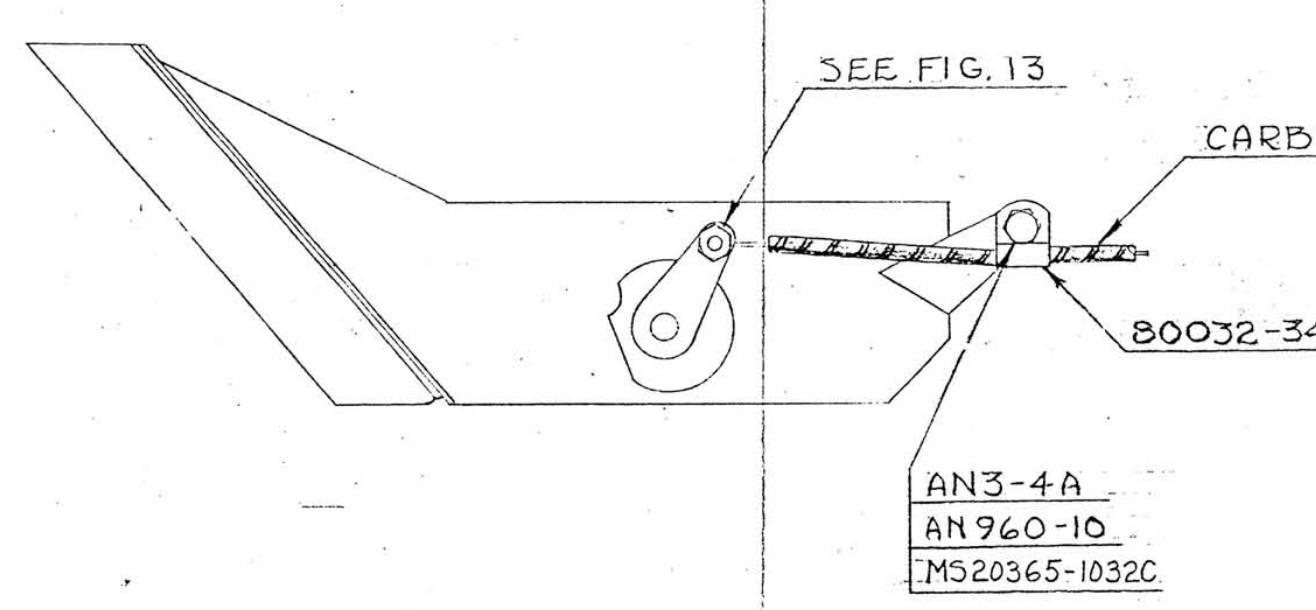
SEE FIG. 13
CARB. HEAT CONTROL
80032-34
AN3-4A
AN960-10
MS20365-1032C

FIG. 4
CARB. HEAT CONTROL ATTACH.
6 IN. = 1 FT.

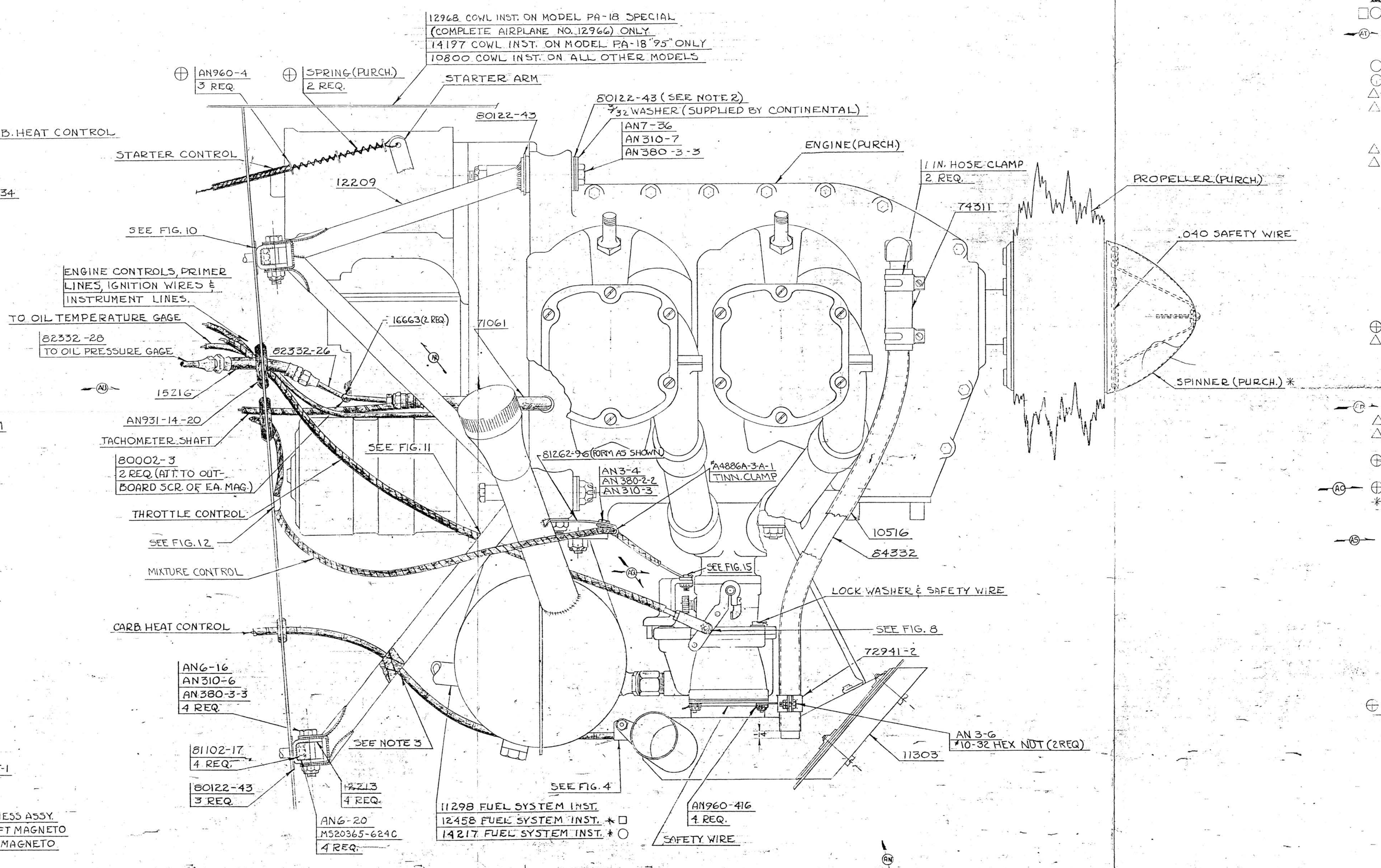
12968 COWL INST. ON MODEL PA-18 SPECIAL (COMPLETE AIRPLANE NO. 12966) ONLY
14197 COWL INST. ON MODEL PA-18 "95" ONLY
10800 COWL INST. ON ALL OTHER MODELS
AN960-4
3 REQ.
SPRING (PURCH.)
2 REQ.
STARTER ARM
80122-43
80122-43 (SEE NOTE 2)
7/32 WASHER (SUPPLIED BY CONTINENTAL)
AN7-36
AN310-7
AN380-3-3
ENGINE (PURCH.)
1 IN. HOSE CLAMP
2 REQ.
74311
PROPELLER (PURCH.)
.040 SAFETY WIRE
SPINNER (PURCH.) *
STARTER CONTROL
12209
SEE FIG. 10
ENGINE CONTROLS, PRIMER LINES, IGNITION WIRES & INSTRUMENT LINES.
TO OIL TEMPERATURE GAGE
82332-28
TO OIL PRESSURE GAGE
16663 (2 REQ.)
71061
82332-26
15216
AN931-14-20
TACHOMETER SHAFT
80002-3
2 REQ. (ATT. TO OUTBOARD SCR. OF EA. MAG.)
THROTTLE CONTROL
SEE FIG. 11
SEE FIG. 12
MIXTURE CONTROL
81262-96 (FORM AS SHOWN)
AN3-4
AN380-2-2
AN310-3
#A4886A-3-A-1
TINN. CLAMP
10516
84332
SEE FIG. 15
LOCK WASHER & SAFETY WIRE
SEE FIG. 8
72941-2
AN3-6
#10-32 HEX NUT (2 REQ.)
11303
CARB. HEAT CONTROL
AN6-16
AN310-6
AN380-3-3
4 REQ.
SEE NOTE 3
81102-17
4 REQ.
80122-43
3 REQ.
12213
4 REQ.
AN6-20
MS20365-624C
4 REQ.
SEE FIG. 4
11298 FUEL SYSTEM INST.
12458 FUEL SYSTEM INST. * □
14217 FUEL SYSTEM INST. * ○
AN960-416
4 REQ.
SAFETY WIRE

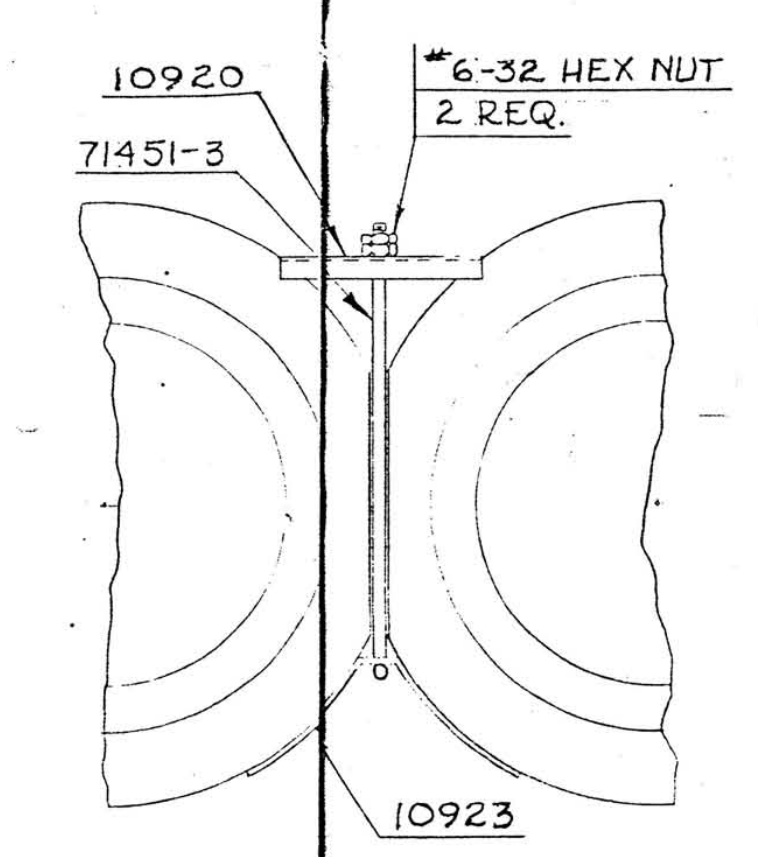
10920
71451-3
#6-32 HEX NUT
2 REQ.
10923

FIG. 5
INTERCYLINDER BAFFLE INST.
AT CYLINDER HEAD
3 IN. = 1 FT.

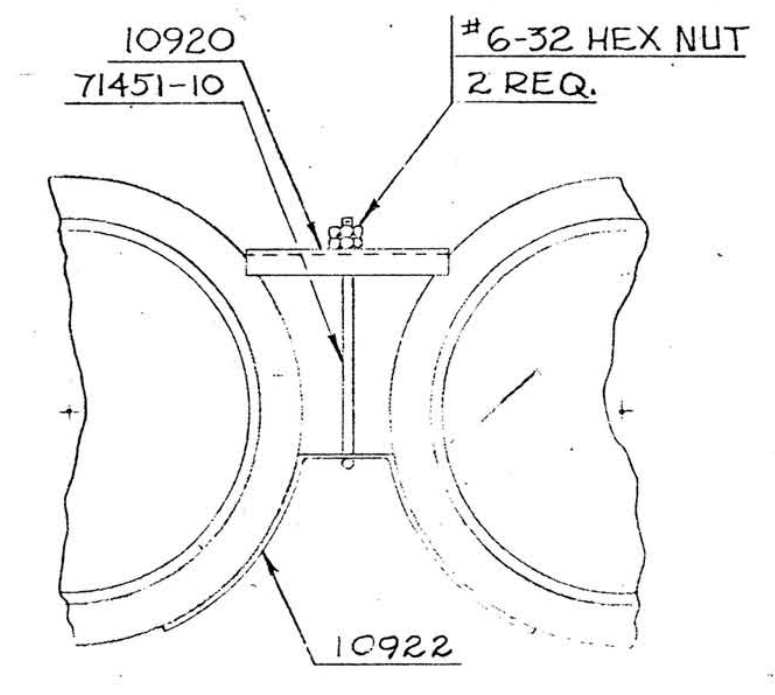
10920
71451-10
#6-32 HEX NUT
2 REQ.
10922

FIG. 6
INTERCYLINDER BAFFLE INST.
AT CYLINDER BARREL
6 IN. = 1 FT.

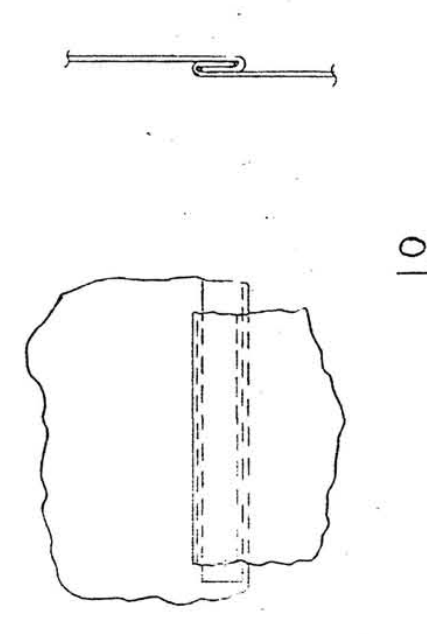

FIG. 7
SIDE BAFFLE CONNECTING DETAIL
FULL SIZE

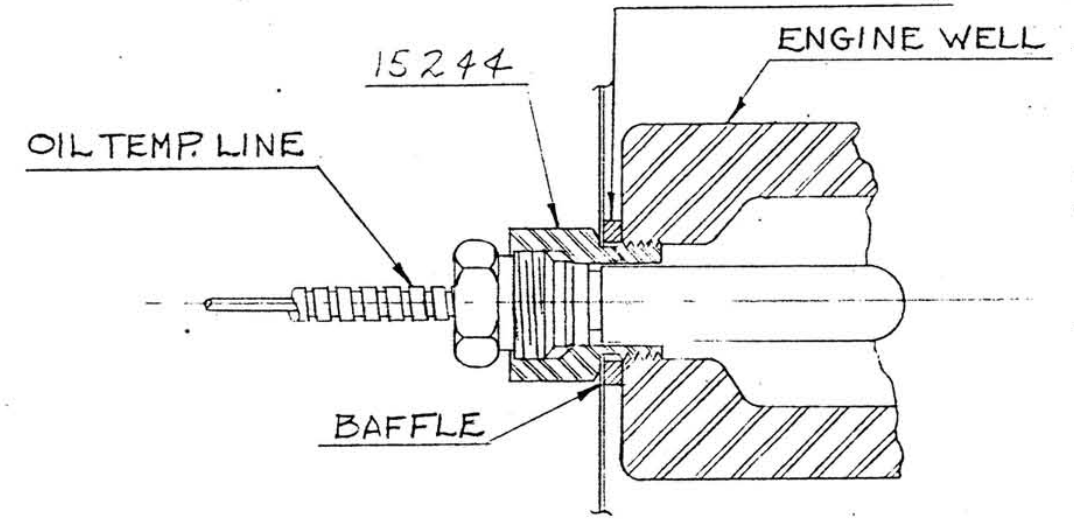
15244
OIL TEMP LINE
WASHER (PURCH)
ENGINE WELL
BAFFLE

FIG. 14
FULL SIZE

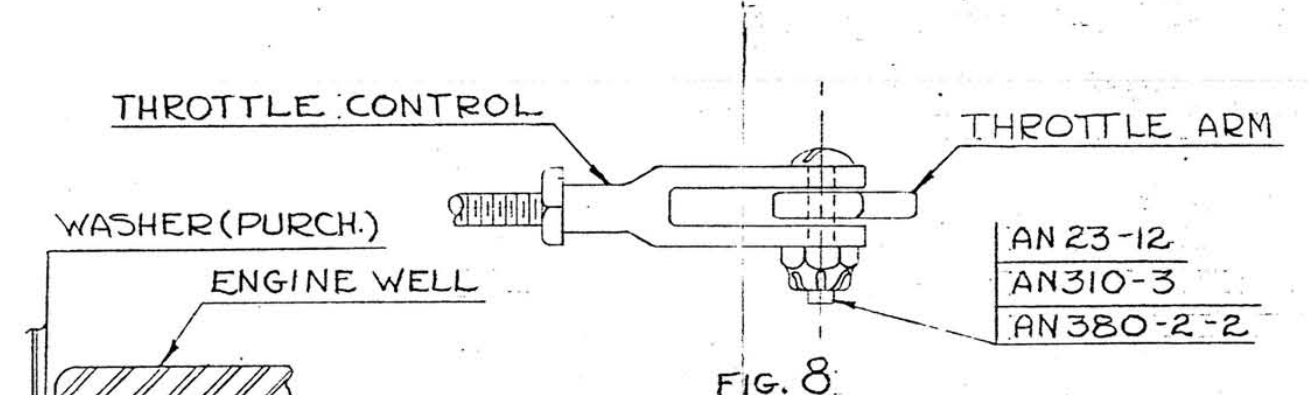
THROTTLE CONTROL
THROTTLE ARM
AN23-12
AN310-3
AN380-2-2

FIG. 8
THROTTLE CONTROL ATT.
FULL SIZE

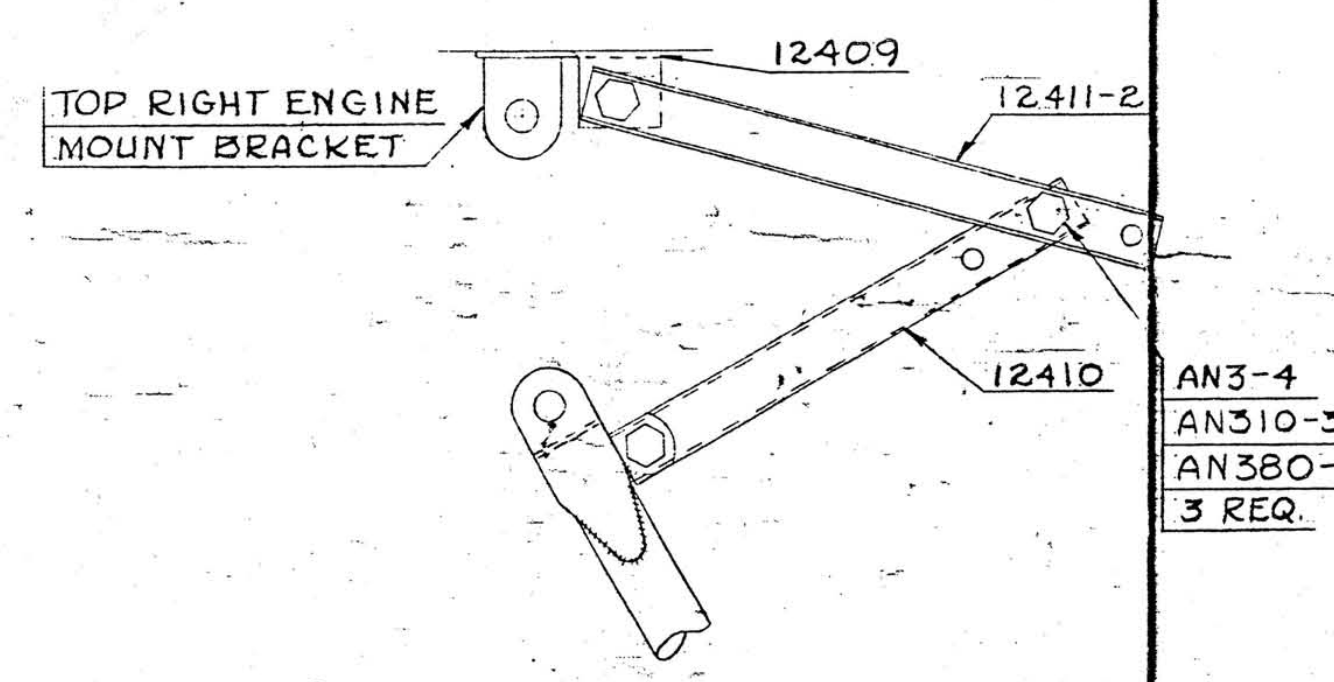
TOP RIGHT ENGINE MOUNT BRACKET
12409
12411-2
12410
AN3-4
AN310-3
AN380-2-2
3 REQ.

FIG. 10
6 IN. = 1 FT.

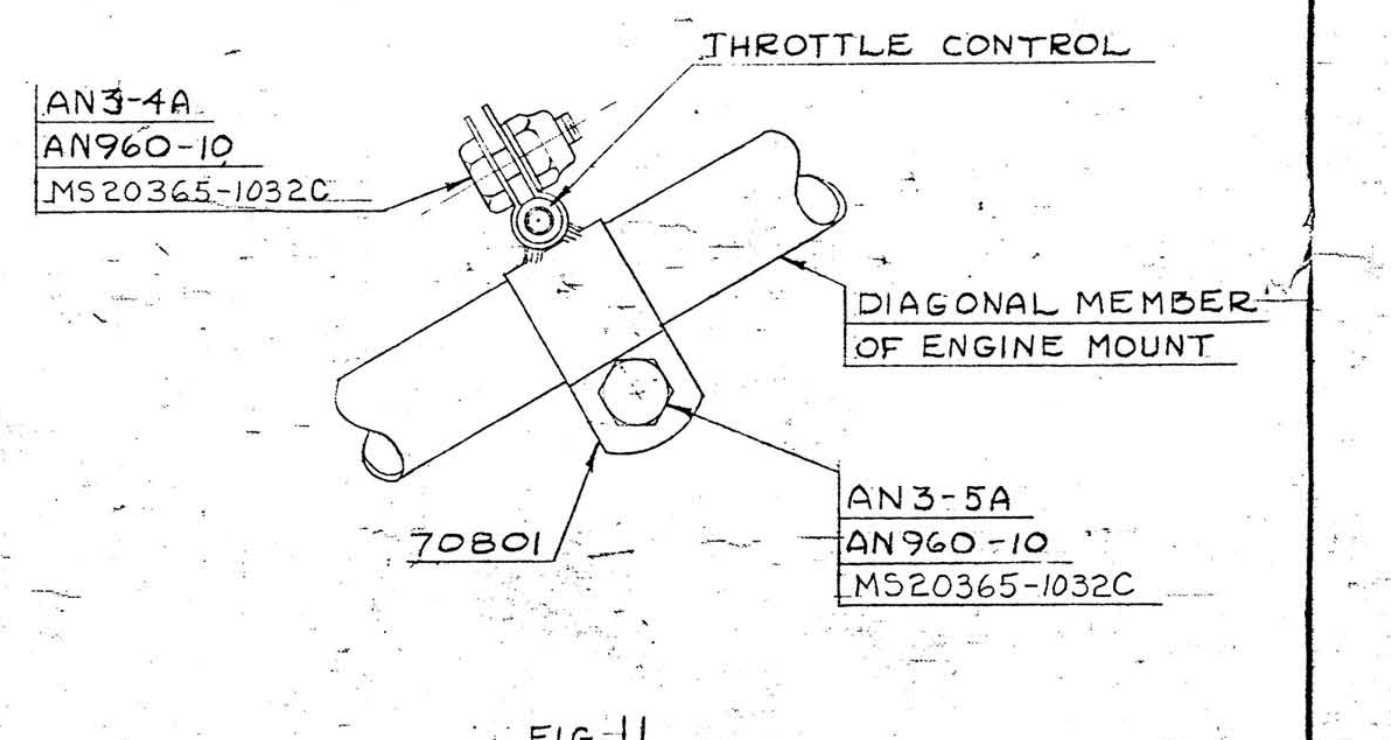
THROTTLE CONTROL
AN3-4A
AN960-10
MS20365-1032C
DIAGONAL MEMBER OF ENGINE MOUNT
70801
AN3-5A
AN960-10
MS20365-1032C

FIG. 11
THROTTLE CLAMP INST.
FULL SIZE

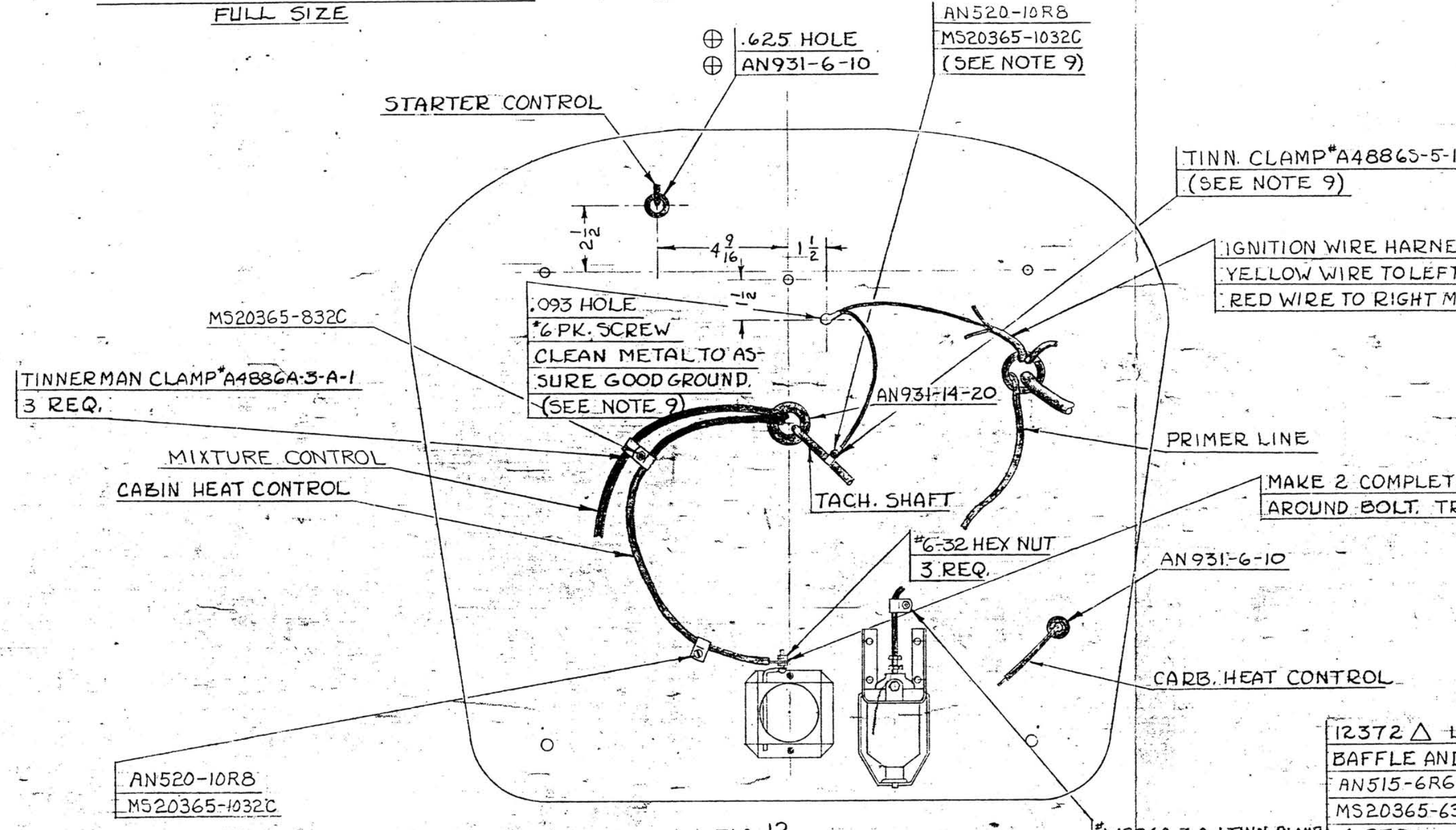
.625 HOLE
AN931-6-10
AN520-10R8
MS20365-1032C
(SEE NOTE 9)
STARTER CONTROL
TINN. CLAMP #A4886S-5-1
(SEE NOTE 9)
IGNITION WIRE HARNESS ASSY.
YELLOW WIRE TO LEFT MAGNETO
RED WIRE TO RIGHT MAGNETO
2 1/2
4 9/16
1 1/2
1
MS20365-832C
.093 HOLE
#6 PK. SCREW
CLEAN METAL TO ASSURE GOOD GROUND.
(SEE NOTE 9)
TINNERMAN CLAMP #A4886A-3-A-1
3 REQ.
AN931-14-20
MIXTURE CONTROL
CABIN HEAT CONTROL
TACH. SHAFT
PRIMER LINE
MAKE 2 COMPLETE TURNS OF CONTROL WIRE AROUND BOLT. TRIM OFF END OF WIRE.
#6-32 HEX NUT
3 REQ.
AN931-6-10
CARB. HEAT CONTROL
AN520-10R8
MS20365-1032C
#A4886A-3-A-1 TINN. CLAMP
AN526-832R8
MS20365-832C

FIG. 12
CABIN HEAT CONTROL INSTALLATION
3 IN. = 1 FT.

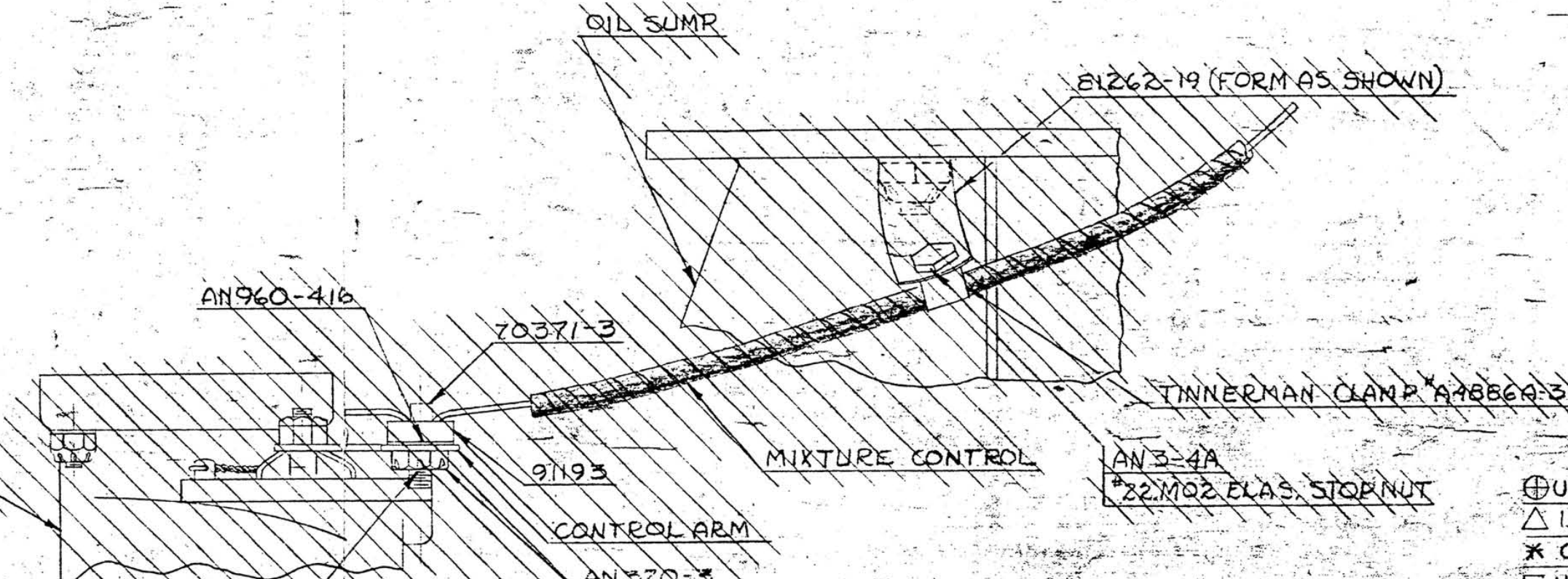
OIL SUMP
81262-96 (FORM AS SHOWN)
AN960-416
70371-3
TINNERMAN CLAMP #A4886A-3-A-1
CARBURETOR
91193
MIXTURE CONTROL
AN3-4A
#22 MQ2 ELAS. STOP NUT
CONTROL ARM
AN320-3
AN380-2-2

FIG. 9
MIXTURE CONTROL ATT.
FULL SIZE

⊕ USED ON CONTINENTAL C-90-12F ENGINE ONLY.
△ USED ON CONTINENTAL C-90-8F ENGINE ONLY.
* OPTIONAL EQUIPMENT.
□ USED ON PA-18 "95" AIRPLANES UP TO SER. NO. 18-3014.
○ USED ON PA-18 "95" AIRPLANES SER. NO. 18-3014 & UP.
▲ USED ON PA-18 SPECIAL (COMPLETE AIRPLANE 12966).

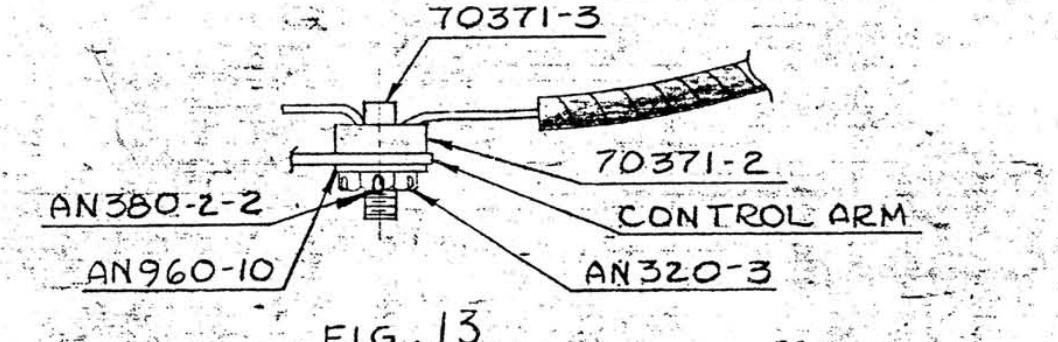
70371-3
70371-2
CONTROL ARM
AN380-2-2
AN960-10
AN320-3

FIG. 13
CARB. HEAT CONTROL WIRE ATTACH.
FULL SIZE

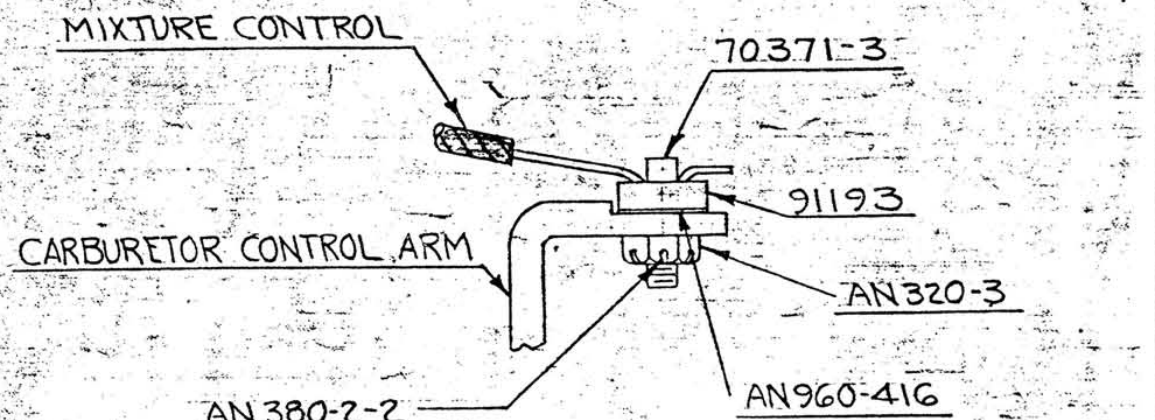
MIXTURE CONTROL
70371-3
91193
CARBURETOR CONTROL ARM
AN320-3
AN380-2-2
AN960-416

FIG. 15
MIXTURE CONTROL ATTACHMENT
FULL SIZE

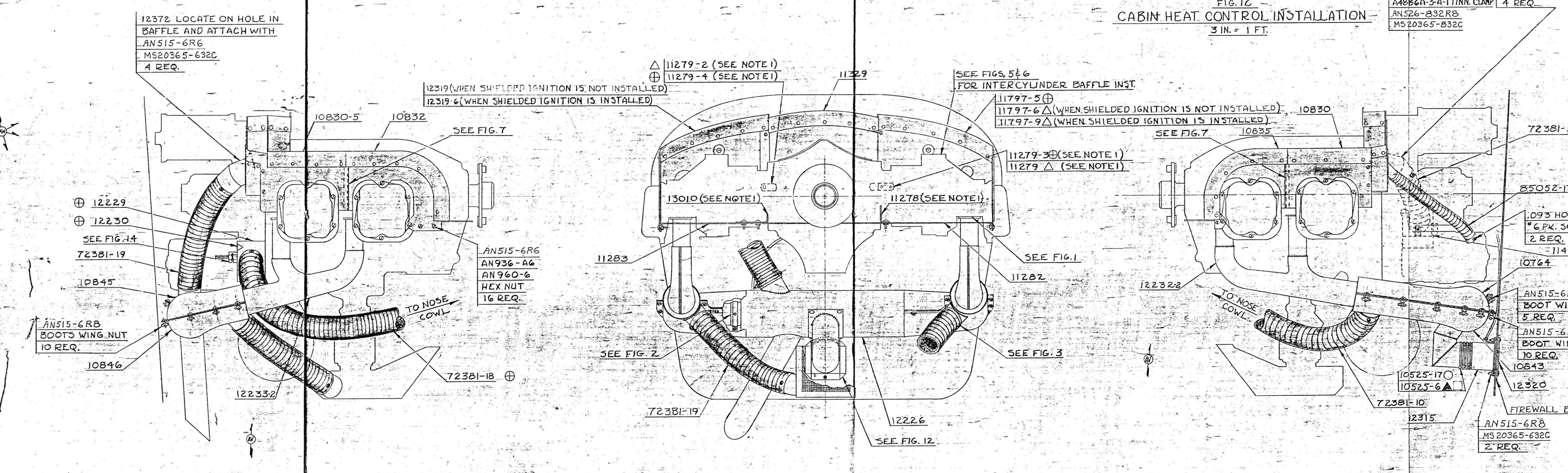
12372 LOCATE ON HOLE IN BAFFLE AND ATTACH WITH
AN515-6R6
MS20365-632C
4 REQ.
12319 (WHEN SHIELDED IGNITION IS NOT INSTALLED)
12319-6 (WHEN SHIELDED IGNITION IS INSTALLED)
10830-5
10832
SEE FIG. 7
12229
12230
SEE FIG. 14
72381-19
10845
AN515-6R8
BOOTS WING NUT
10 REQ.
10846
12233-2
TO NOSE COWL
72381-18
AN515-6R6
AN936-A6
AN960-6
HEX NUT
16 REQ.
11279-2 (SEE NOTE 1)
11279-4 (SEE NOTE 1)
11329
SEE FIGS. 5 & 6 FOR INTERCYLINDER BAFFLE INST.
11797-5
11797-6 (WHEN SHIELDED IGNITION IS NOT INSTALLED)
11797-9 (WHEN SHIELDED IGNITION IS INSTALLED)
11279-3 (SEE NOTE 1)
11279 (SEE NOTE 1)
13010 (SEE NOTE 1)
11278 (SEE NOTE 1)
11283
SEE FIG. 1
11282
SEE FIG. 2
SEE FIG. 3
72381-19
12226
SEE FIG. 12
10830
SEE FIG. 7
10835
72381-5
85052-13
.093 HOLE
#6 PK. SCR.
2 REQ.
11491
10764
122322
TO NOSE COWL
AN515-6R8
BOOT WING NUT
5 REQ.
AN515-6R8
BOOT WING NUT
10 REQ.
10843
10525-17
10525-6
12320
72381-10
12315
FIREWALL BLANKET
AN515-6R8
MS20365-632C
2 REQ.
12372 △ LOCATE ON HOLE IN BAFFLE AND ATTACH WITH
AN515-6R6
MS20365-632C
4 REQ.

EXHAUST SYSTEM & BAFFLE INSTALLATION
3 IN. = 1 FT.

NOTE:
1. BRACKETS WHERE "SEE NOTE 1" IS INDICATED ARE MOUNTED TO ENGINE STUDS.
2. WASHER TO BE USED WHEN NEEDED TO PREVENT STEEL WASHER CONTACTING ENGINE BOSS.
3. TAPE & SAFETY WIRE CONTROLS & FLEXIBLE TUBES TO ADJACENT STRUCTURE WHERE NECESSARY.
4. PROPELLER #M76AK-2 IS STANDARD ON MODEL PA-18 SPECIAL (COMPLETE AIRPLANE #12966) & OPTIONAL ON ALL OTHER MODELS.
5. ~~CONTINENTAL C-90-8F ENGINE WITH SHIELDED IGNITION IS STANDARD ON MODEL PA-18 SPECIAL (COMPLETE AIRPLANE 12966)~~
6. McCAULEY MET-L-PROP 1890 IS AN ALTERNATE TO SENSENICH #M76AK-2 PROP. ON MODEL PA-18 SPECIAL (COMPLETE AIRPLANE #12966) ONLY.
7. SEAL ALL FIREWALL OPENINGS WITH PLASTIKON RUBBER PUTTY, (PURCH. B.F. GOODRICH)
8. CONTINENTAL C-90-8F ENGINE WITH SHIELDED IGNITION, C-90-12F ENGINE WITH SHIELDED IGNITION & C-90-12F ENGINE WITH NON-SHIELDED IGNITION ARE OPTIONAL EQUIPMENT ON MODEL PA-18 "95".
9. PARTS WHERE "SEE NOTE 9" IS INDICATED, USED ONLY WHEN RADIO IS INSTALLED.

APR 17 1975

	PART No.	No. REQ.	SIZE	DESCRIPTION / MATERIAL
	MS20365-1032C	1		NUT (SEE NOTE 9)
	#6	1	3/8 L.	TYPE A STOVE HD. PK. SCR. (SEE NOTE 9)
	AN520-10R8	1		MACH. SCREW (SEE NOTE 9)
		1		CONTINENTAL C-90-12F WITH SHIELDED IGNITION. (SEE NOTE 8)
		1		CONTINENTAL C-90-12F WITH NON-SHIELDED IGNITION. (SEE NOTE 8)
▲		1		CONTINENTAL C-90-8F WITH SHIELDED IGNITION. (SEE NOTE 8)
□○		1		CONTINENTAL C-90-8F WITH NON-SHIELDED IGNITION.
	15244	1		ADAPTER
	AN526-832R8	1		MACH. SCREW
○	10525-17	1		HOSE
⊕	AN931-6-10	1		GROMMET
△	11797-9	1	BAFFLE ASS'Y	WHEN SHIELDED IGNITION IS INSTALLED.
△	11797-6			WHEN SHIELDED IGNITION IS NOT INSTALLED.
	12319-6	1	BAFFLE ASS'Y	WHEN SHIELDED IGNITION IS INSTALLED
	12319			WHEN SHIELDED IGNITION IS NOT INSTALLED
△	11279-2	1		BRACKET
△	11279	1		BRACKET
	AN931-6-10	1		GROMMET
	14197	1	COWL INST.	ON MODEL PA-18 "95" ONLY
	12968			ON MODEL PA-18 SPECIAL (COMPLETE AIRPLANE 12966) ONLY
	10800			ON ALL OTHER MODELS
		1		McCAULEY MET-L-PROP 1B90 (SEE NOTE 6)
				PROPELLER #M76AK-2 PURCH. SENSENICH (SEE NOTE 4)
				PROPELLER #726K50 PURCH. SENSENICH
	81262-96	1		LINK
	AN520-10R8	1		MACH. SCREW
		5		TINNERMAN CLAMP #A4886A-3-A-1
⊕ △	12372	1 2		TAKE OFF ASSEMBLY
	71061	1		HOSE ASSEMBLY
	12411-2	1		CHANNEL
	12410	1		
	12409	1		LUG
		1	.040×60	GALVANIZED ANNEALED STEEL WIRE
△	11491	1		WELL BAFFLE ASSY
△	72381-5	1		HOSE
	AN6-20	4		BOLT
⊕	#6	2	3/8 L.	TYPE "A" STOVE HD. P.K. SCR.
		1	3/4×6 FT.	FRICTION TAPE
⊕		2	1 3/4 L.	SPRING #T56 (BLACK JAPANNED FINISH) (PURCH.) W.B. JONES
*		1		PROP. SPINNER #3-M-168 PURCH. FIRESTONE
		1		WASHER #AH-1522 PURCH. U.S. GAUGE CO.
		1		#1214-00-00-0511 LOCKWASHER (PURCH) SHAKEPROOF
		2		1 IN. HOSE CLAMP
		25		#W65632 BOOTS WING NUT
	MS20365-624C	4		NUT
	MS20365-1032C	4		
	MS20365-832C	10		
	MS20365-632C	10		
	#10-32	2		HEX NUT
	#6-32	27		
	AN515-8R44	8		MACH. SCREW
	AN515-6R8	27		
	AN515-6R6	24		
⊕	AN960-4	3		WASHER
	AN960-10	3		WASHER
	AN960-6	16		
	AN936-A6	16		
	AN931-14-20	2		GROMMET
	AN380-3-3	8		COTTER PIN
	AN380-2-2	8		
	AN320-3	2		NUT
	AN310-7	4		
	AN310-6	4		
	AN310-3	6		
	AN960-416	5		WASHER
	AN23-12	1		BOLT
	AN7-36	4		
	AN3-4	4		
	AN6-16	4		
	AN3-6	1		
	AN3-5A	1		
	AN3-5	1		
⊕	11279-4	1		BRACKET
	12315	1		BOX ASS'Y
	AN3-4A	2		BOLT
	91193	1		FITTING
⊕	85052-13	1		TUBE
	84332	1		TUBE
	82332-26	1		TUBE
	82332-28	1		
	70371-2	1		FITTING
	81102-17	4		WASHER
	80122-43	11		
	80032-34	1		CLAMP
	80002-3	2		
	74311	1		HOSE
	72941-2	1		CLAMP ASSY
	12320	1		PLATE
⊕	72381-18	1		TUBE
	72381-10	1		
	72381-19	1		
	70371-3	2		STUD
	15216	1		HOSE ASSY
	71451-10	2		ROD
	71451-3	2		
	70801	1		CLAMP ASSY
	70591-2	1		CLAMP ASSY
⊕*	14217	1		FUEL SYSTEM INST.
	11298			
□*	12458			
	12233-2	1		STACK ASS'Y
	12232-2	1		
⊕	12230	1		PLATE
⊕	12229	1		BAFFLE ASSY
▲□	10525-6	1		HOSE
	12226	1		SHROUD ASS'Y
	12213	4		BRACKET ASS'Y
	12209	1		ENGINE MOUNT ASS'Y
⊕	11797-5	1		BAFFLE ASS'Y
	11329	1		
	11303	1		BOX ASS'Y
	11283	1		BAFFLE
	11282	1		
⊕	11279-3	1		BRACKET
	11278	1		
	13010	1		
	10923	2		BAFFLE
	10922	2		
	10920	4		SUPPORT
	10846	1		SHROUD ASS'Y
	10845	1		SHROUD
	10843	1		SHROUD ASS'Y
	10835	1		BAFFLE ASSY
	10832	1		
	10830	1		
	10830-5	1		
	10764	1		SHROUD
	10516	1		COVER ASS'Y

PART NO.	NO. REQ.	SIZE	DESCRIPTION / MATERIAL
16663	2		INSULATING SLEEVE
	1		TINNERMAN CLAMP #A4886S-5-1 (SEE NOTE 9)

LET.	REVISION	DATE	BY
AX	15244 WAS BODY NUT #AH-1172-NX	10-26-62	HMK
AW	AN MACH. SCR'S. WAS COMM. & MS NUT PART NOS. WAS E.S.N.	3-27-62	R.H.

LET.	REVISION	DATE	BY
AV	12232-2 WAS 12232, 12233-2 WAS 12233	8-8-61	BCC
AU	15216 WAS 13425	5-24-61	BCC
AT	BODY NUT #AH-1172-NX WAS #AH-1172-C	11-23-60	IEM
AS	#1214-00-00-0511 WAS #1214 TYPE 12	8-12-60	J.C.F.
AR	16663 ADDED	2-27-59	GRO
AQ	MIXTURE CONTROL ATTACH. REV.; BREATHER TUBE ATTACH. REV.; FIG. 9 CANC.; FIG. 12 REV.; FIG. 15 ADDED	1-20-59	[illegible]
AP	SAFETY WIRE SPEC. REV.	9-11-58	HMK
AO	SPRING SPEC. REVISED	6-18-56	RJS
AN	VIEW OF 11303 REV.	4-10-56	[illegible]
AM	REDRAWN & REVISED	12-24-54	BCC

MODEL	PER PLANE	NEXT ASSEMBLY	SUPERSEDES	SUP. BY

THIS DRAWING IS THE PROPERTY OF THE PIPER AIRCRAFT CORP. AND ITS POSSESSION BY UNAUTHORIZED PERSONS SHALL NOT BE CONSTRUED AS PERMISSION TO REPRODUCE FOR SALE, IN WHOLE OR IN PART, ANY DEVICES SHOWN THEREON.

PIPER AIRCRAFT CORP.
LOCK HAVEN, PENNA.

SCALE 6 IN. = 1 FT. EX NOTED TOTAL WT.–LBS.
FINISH—PIPER SPECIFICATION #10
MANUFACTURING PRACTICES—PIPER SPECIFICATION #9

POWER PLANT

DRAFTSMAN	CHECKER	STANDARDS
B.C.C. 12-24-54	C.E.K. 1-10-55	

12242